Cambridge International Examinations
Cambridge International General Certificate of Secondary Education

CANDIDATE NAME	
CENTRE NUMBER	
CANDIDATE NUMBER	

PHYSICS **0625/23**

Paper 2 Core **May/June 2014**

1 hour 15 minutes

Candidates answer on the Question Paper.

No Additional Materials are required.

READ THESE INSTRUCTIONS FIRST

Write your Centre number, candidate number and name on all the work you hand in.
Write in dark blue or black pen.
You may use an HB pencil for any diagrams or graphs.
Do not use staples, paper clips, glue or correction fluid.
DO **NOT** WRITE IN ANY BARCODES.

Answer **all** questions.
Electronic calculators may be used.
You may lose marks if you do not show your working or if you do not use appropriate units.
Take the weight of 1 kg to be 10 N (i.e. acceleration of free fall = 10 m / s^2).

At the end of the examination, fasten all your work securely together.
The number of marks is given in brackets [ ] at the end of each question or part question.

The syllabus is approved for use in England, Wales and Northern Ireland as a Cambridge International Level 1/Level 2 Certificate.

This document consists of **18** printed pages and **2** blank pages.

DC (AC/JG) 81311/4
© UCLES 2014

CAMBRIDGE International Examinations

[Turn over

www.root19.com +91 - 9969 353 391

1 A motorcyclist travels from A to B along a straight road, as shown in Fig. 1.1.

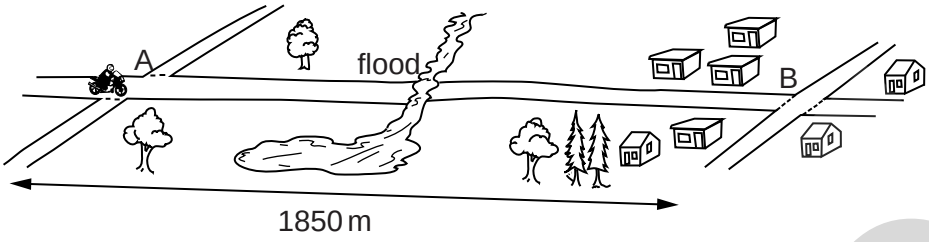

Fig. 1.1

The motorcyclist passes over the minor crossroads at A at 15 m / s and, for most of the distance between A and B, he continues at 15 m / s.

The road is flooded at one point, so he has to slow down to ride through the water. He also slows down and stops at the major crossroads at B.

(a) On Fig. 1.2, sketch the speed-time graph for the journey between A and B.

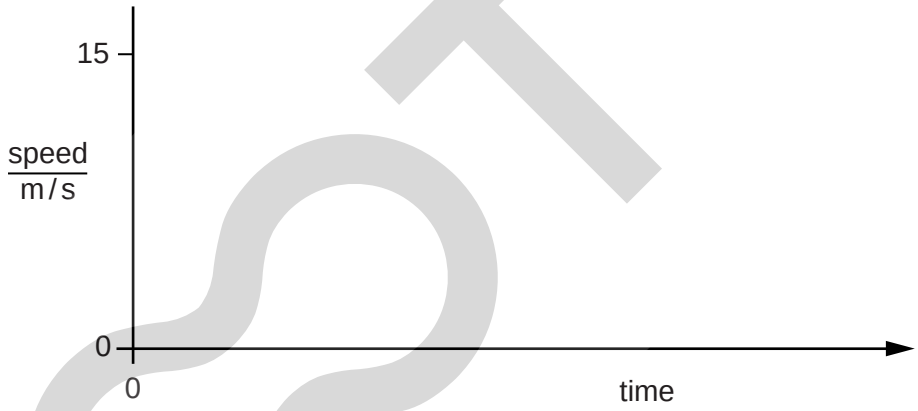

[5]

Fig. 1.2

(b) The distance between A and B is 1850 m.

(i) If the motorcyclist had been able to maintain 15 m / s all the way from A to B, calculate the total time the ride would have taken.

time = ... s [3]

www.root19.com +91 - 9969 353 391

(ii) Suggest how the actual time taken from A to B compares with your value in **(b)(i)**. Tick one box.

greater than calculated ☐

the same as calculated ☐

less than calculated ☐

[1]

(c) The motorcyclist completes another journey. The speed-time graph for this journey is shown in Fig. 1.3.

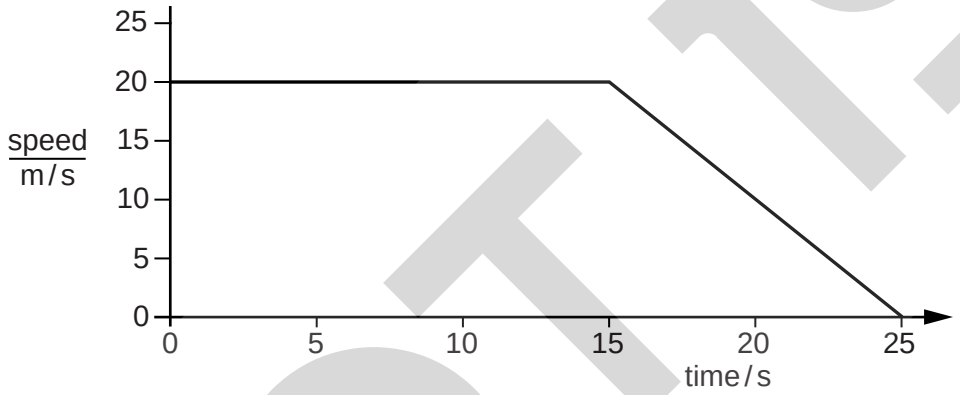

Fig. 1.3

Use the graph to determine the distance travelled by the motorcyclist during this journey.

distance travelled = ... m [4]

[Total: 13]

www.root19.com +91 - 9969 353 301

2 A spring is attached to the underside of the edge of a bench. A metre rule is fixed next to it, as shown in Fig. 2.1.

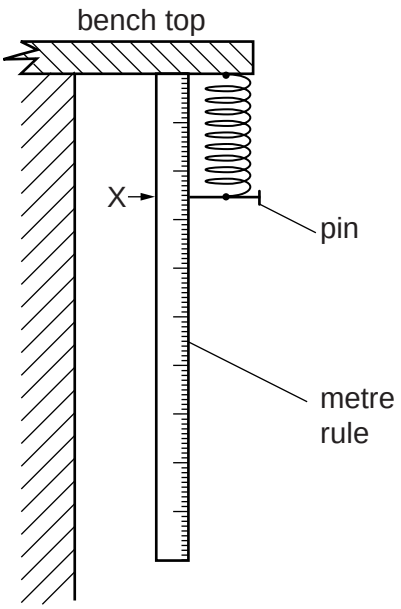

Fig. 2.1

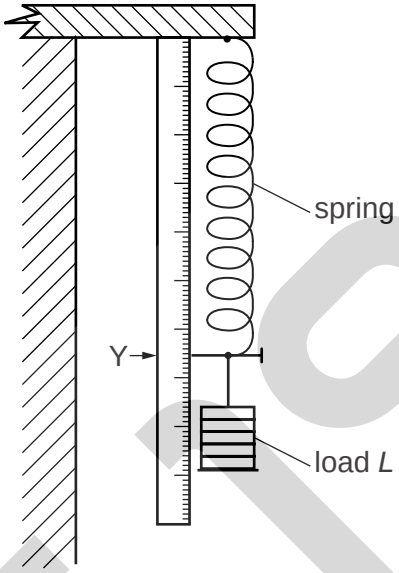

Fig. 2.2

When there is no load on the spring, the marker pin is at X.

When a load of weight *L* is hanging on the spring, the marker pin is at Y, as shown in Fig. 2.2.

(a) Describe how you would determine the value of the extension of the spring caused by the load.

.....

.....

.....

.....[3]

(b) On Fig. 2.3, sketch the graph you would expect to be able to obtain as the spring is gradually stretched from X to Y.

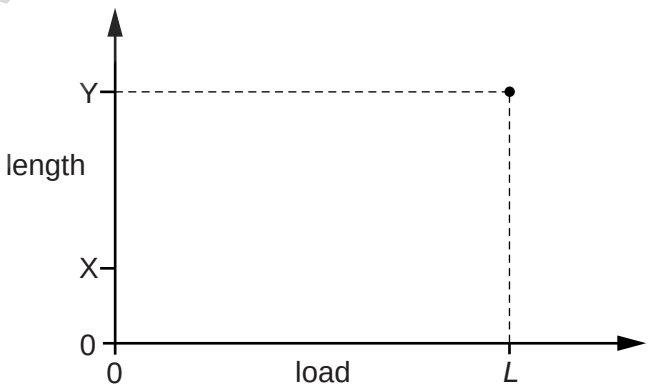

[1]

Fig. 2.3

[Total: 4]

www.root19.com +91 - 9969 353 391

3 A wheel F on an axle is free to rotate about a horizontal axis, as shown in Fig. 3.1.

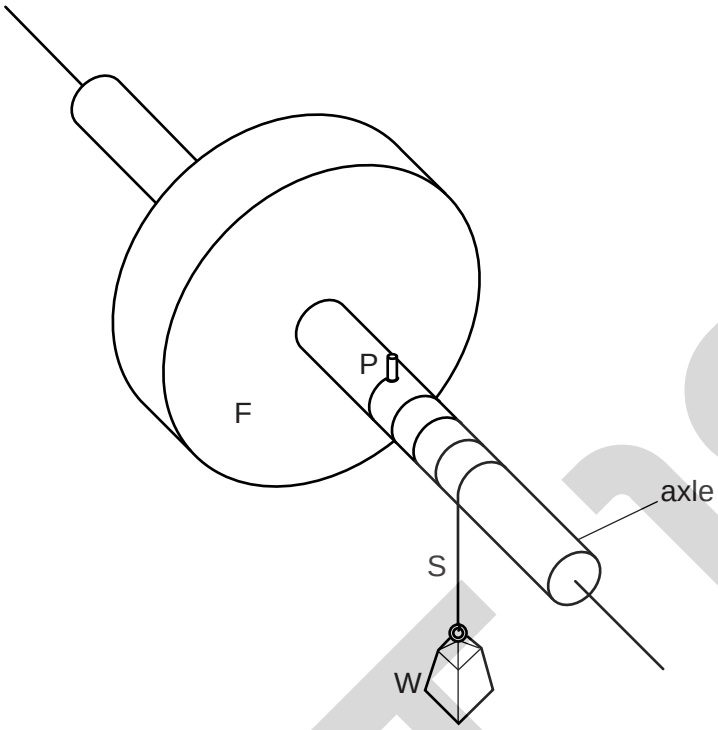

Fig. 3.1

String S has a loop on one end, which is hooked over peg P on the axle. The string is wound several times around the axle, and has a weight W attached to the other end.

W is released and accelerates downwards. The string comes off the peg just as W reaches the ground.

(a) As W is accelerating downwards, what, if anything, happens to

(i) the gravitational potential energy of W, ...

(ii) the kinetic energy of W, ...

(iii) the gravitational potential energy of F, ...

(iv) the kinetic energy of F? .....
[4]

(b) What happens to the kinetic energy of W when it hits the ground?

.....[1]

(c) What happens to the kinetic energy of F after W hits the ground?

.....[1]

[Total: 6]

www.root19.com +91 - 9969 353 301

4 A mercury manometer is connected to a gas supply, as shown in Fig. 4.1.

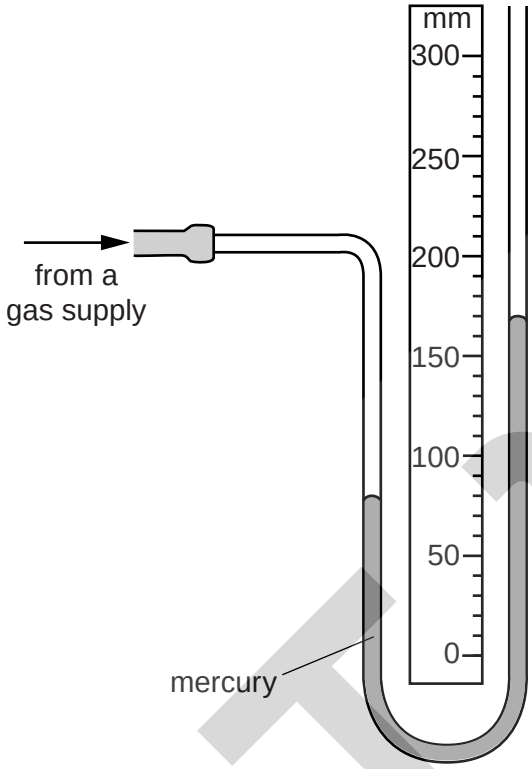

Fig. 4.1

(a) Using the scale on Fig. 4.1, state the reading of

(i) the mercury level in the left-hand column, ... mm

(ii) the mercury level in the right-hand column. ..... mm
[2]

(b) **(i)** Is the pressure of the gas from the supply greater than or less than atmospheric pressure, and how do you know?

.....

.....

.....[1]

(ii) By how much is the gas pressure greater or less than atmospheric pressure?

pressure difference = ... mm of mercury [1]

www.root19.com +91 - 9969 353 391

(c) The gas supply is turned off. The rubber tube connecting the manometer to the gas supply is disconnected, so that both ends of the manometer are open to the atmosphere.

What are the new readings of the mercury levels in each column?

left-hand column reading = ... mm

right-hand column reading = ... mm
[2]

(d) Suggest why water could not be used in this manometer to measure the gas pressure from the supply.

.....

.....[1]

[Total: 7]

© UCLES 2014

www.root19.com
+91 - 9969 353 301

5 As part of his meal, a workman has a cup containing a hot drink.

In order to keep the drink hot whilst he eats the rest of his meal, he covers the cup, as shown in Fig. 5.1.

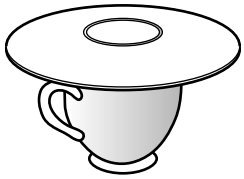

Fig. 5.1

(a) Which sources of energy loss does this action reduce? Tick **two** boxes.

convection from the surface of the liquid ☐

evaporation from the surface of the liquid ☐

conduction through the cup ☐

radiation from the surface of the cup ☐

[2]

(b) Suggest one other way that the workman can help to keep the drink hot while he eats the rest of his meal.

.....

.....[1]

[Total: 3]

© UCLES 2014
www.root19.com

+91 - 9969 353 391

6 A laboratory worker hears the sound from a loudspeaker, as illustrated in Fig. 6.1.

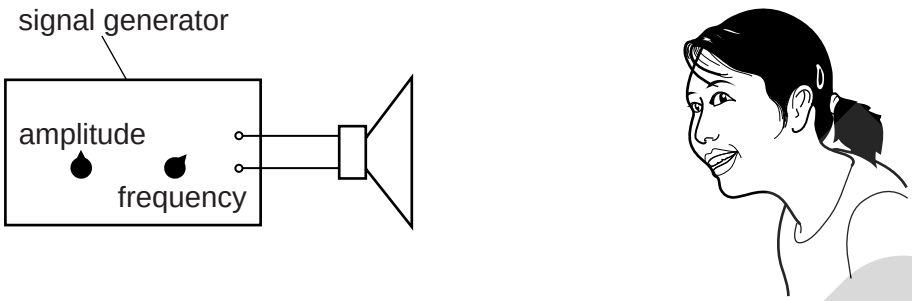

Fig. 6.1

The amplitude control knob and the frequency control knob on the signal generator are set so that the worker hears a particular note from the loudspeaker.

(a) The two control knobs are left untouched but the worker stands further away from the loudspeaker.

What difference, if any, does this make to the sound heard by the worker?

.....[1]

(b) What difference, if any, does it make to the note heard by the worker if

(i) the amplitude of the sound wave is increased,

.....

(ii) the frequency of the sound wave is increased?

.....
[2]

(c) Describe what happens to the air in order for the sound from the loudspeaker to reach the laboratory worker's ear.

.....

.....

.....[2]

(d) The human ear cannot detect all frequencies.

State the approximate range of frequencies for a healthy human ear.

lower frequency limit = ... Hz

upper frequency limit = ... Hz
[2]

[Total: 7]

© UCLES 2014
www.root19.com

+91 - 9969 353 301

7 A filament lamp emits white light, which passes through a small hole in a card. The light spreads out from the hole, as shown in Fig. 7.1.

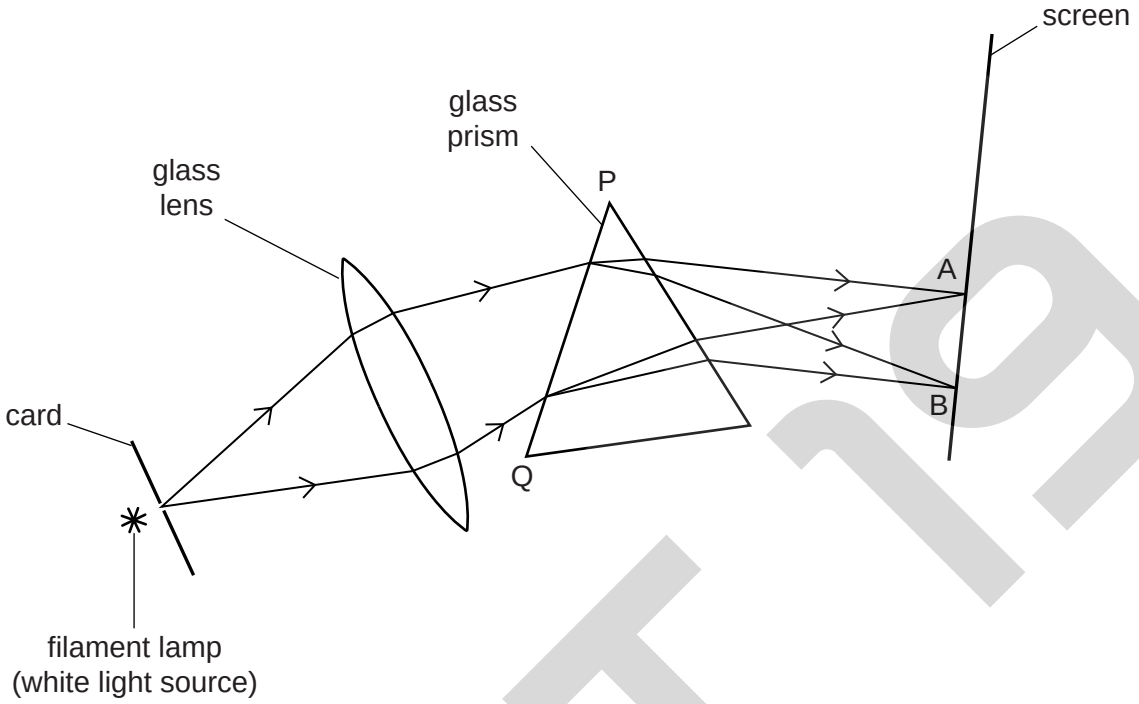

Fig. 7.1

The light from the hole then passes through a glass lens and a glass prism, and finally reaches a screen.

(a) State what is seen in the region AB on the screen.

.....[1]

(b) In Fig. 7.1, what **two** things are shown happening to the light at surface PQ? Tick two boxes.

diffraction ☐

dispersion ☐

reflection ☐

refraction ☐

[2]

www.root19.com +91 - 9969 353 391

(c) Fig. 7.2 shows the same arrangement as in Fig. 7.1, but with the prism removed.

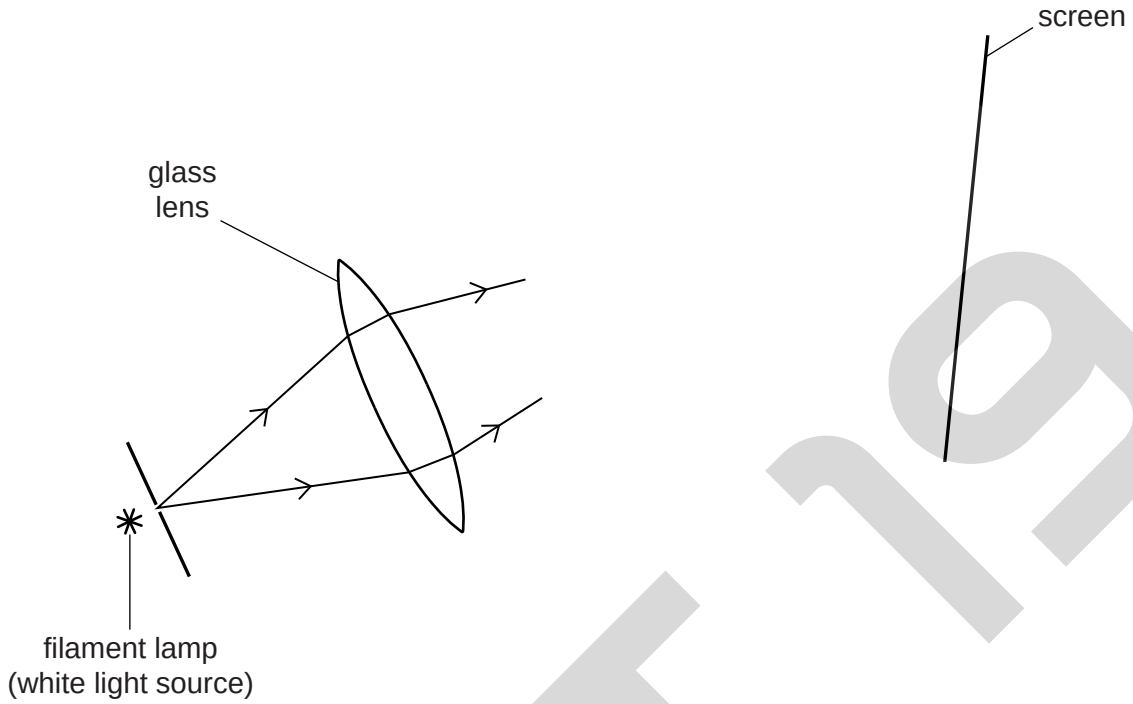

Fig. 7.2

(i) On Fig. 7.2, continue the rays until they reach the screen. [1]

(ii) Describe fully what is now seen on the screen.

.....

.....

.....[2]

[Total: 6]

© UCLES 2014

www.root19.com
+91 - 9969 353 301

8 Fig. 8.1 shows a lens, to the left of which is a vertical object AX with one end on the principal axis.

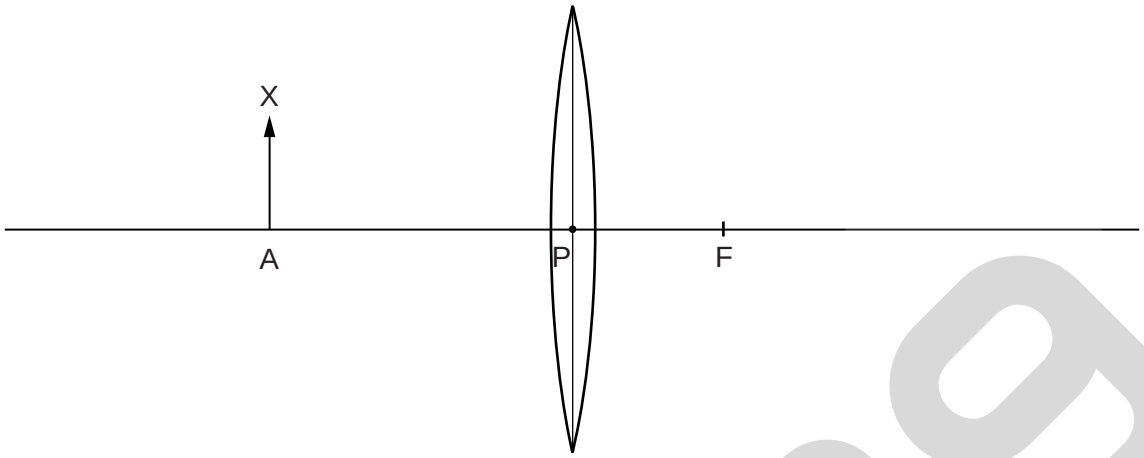

Fig. 8.1

(a) Distance PF is the focal length of the lens.

State the name given to the point F. .....[1]

(b) **(i)** On Fig. 8.1, draw a ray from the top of the object X, which is parallel to the principal axis. Continue this ray at least 6 cm after the lens, to show its path through the air on the other side of the lens. [2]

(ii) On Fig. 8.1, draw another ray that will enable you to locate the image of X. Label this image with the letter Y. [2]

[Total: 5]

© UCLES 2014
www.root19.com

+91 - 9969 353 391

9 **(a)** What is the usual purpose of a transformer? Tick one box.

to increase or decrease a.c. ☐

to increase or decrease d.c. ☐

to turn a.c. into d.c. ☐

[1]

(b) The transformer in Fig. 9.1 is connected to a 240V mains supply, and is being used to light a 6.0V lamp connected between A and B.

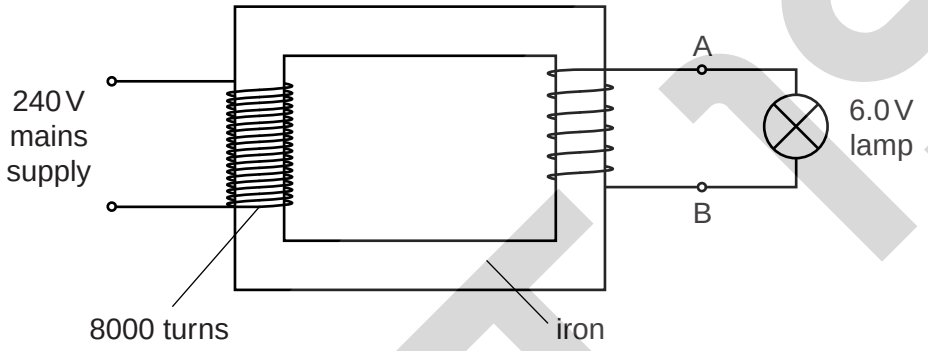

Fig. 9.1

(i) What name is given to the part of the transformer that is shown on Fig. 9.1 as being made of iron?

.....[1]

(ii) The primary coil has 8000 turns.

1. State the material from which the coil is usually made.

.....[1]

2. Calculate the number of turns needed on the secondary coil in order to provide 6.0V between A and B.

number of turns = ...[3]

3. Suggest one difference that is seen in the appearance of the lamp when the mains supply voltage is reduced to 120V.

.....[1]

[Total: 7]

www.root19.com +91 - 9969 353 301

10 A positively charged plastic ball is suspended on an insulating nylon thread, as shown in Fig. 10.1.

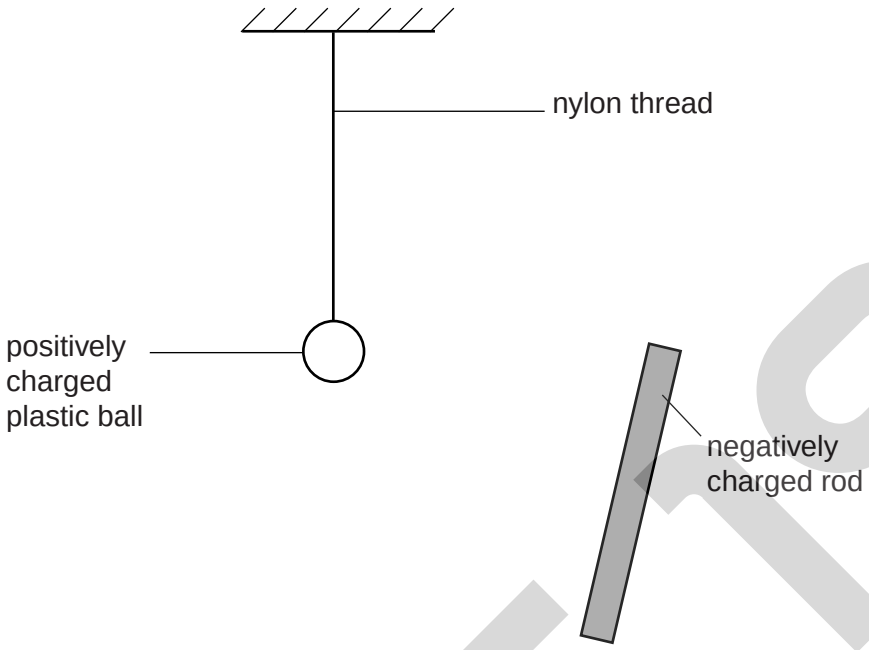

Fig. 10.1

A negatively charged plastic rod is brought towards the positively charged ball.

(a) **(i)** Describe how the rod might have been given its charge.

.....

.....

.....[2]

(ii) Describe what is **seen** happening to the ball as the rod is brought near to it.

.....

.....[2]

(iii) State the reason for what you have described in **(a)(ii)**.

.....

.....[1]

© UCLES 2014
www.root19.com

+91 - 9969 353 391

(b) The negatively charged rod is removed.

An identical plastic ball is suspended on another nylon thread of equal length, so that the balls are a short distance from each other. The second ball is also given a positive charge.

In the space below, sketch how the two balls and their threads will hang.

[2]

[Total: 7]

© UCLES 2014
www.root19.com

+91 - 9969 353 301

11 In an attempt to measure the current in a lamp and a resistor, a student connects the circuit shown in Fig. 11.1.

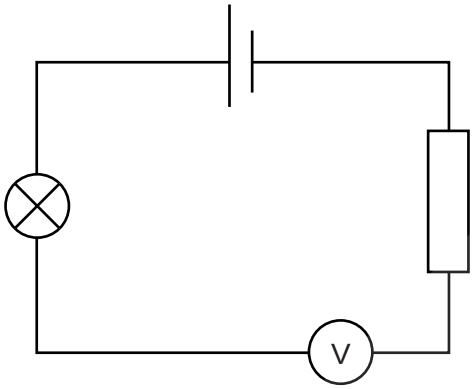

Fig. 11.1

(a) What instrument does the symbol (V) represent?

.....[1]

(b) When the lamp fails to light, she realises that she has used the wrong instrument to measure the current.

(i) With which instrument should she replace it, in order to be able to measure the current?

.....[1]

(ii) In the space below, redraw the circuit of Fig. 11.1, but with the correct instrument in the place of (V), and with (V) connected in parallel with the cell.

[2]

www.root19.com +91 - 9969 353 391

(c) When the circuit is working correctly, the student records that the potential difference across the cell is 1.9 V and that the current in the circuit is 0.038 A.

(i) Calculate the combined resistance of the lamp and the resistor. State the unit.

resistance = ...[4]

(ii) The positions in the circuit of the lamp and the resistor are interchanged, as shown in Fig. 11.2. The measuring instruments are not shown.

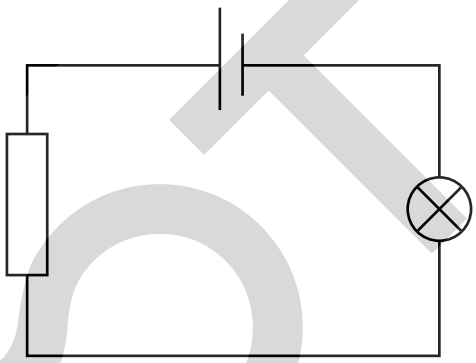

Fig. 11.2

What difference, if any, does interchanging the components make to the value of the current? Tick one box.

increases the current ☐

decreases the current ☐

makes no difference to the current ☐

[1]

[Total: 9]

© UCLES 2014
www.root19.com

+91 - 9969 353 301

12 A dish contains a sample of radioactive powder. The half-life of the radioactive substance is known to be 26 minutes. It decays by β-particle emission.

A radiation detector, held close to the powder, records a count rate of 800 counts/min, after subtraction of the background count rate.

A time of 26 minutes is allowed to elapse after recording the 800 counts/min count rate. A new count rate is then taken.

(a) Calculate the new count rate due to the powder.

count rate = ... counts/min [1]

(b) How many radioactive atoms of the original type remain in the sample after the 26 minutes have elapsed? Tick one box.

- no atoms are left ☐
- the same as at the start ☐
- half the number at the start ☐
- twice the number at the start ☐

[1]

(c) How many atoms in total remain in the sample after 26 minutes has elapsed? Tick one box.

- no atoms are left ☐
- the same as at the start ☐
- half the number at the start ☐
- twice the number at the start ☐

[1]

(d) The sample contains zirconium $^{84}_{40}Zr$.

For one atom of $^{84}_{40}Zr$, state

(i) its nucleon number, ...

(ii) its proton number, ...

(iii) the number of neutrons. .....

[3]

[Total: 6]

www.root19.com +91 - 9969 353 391

BLANK PAGE

© UCLES 2014
www.root19.com

+91 - 9969 353 391

BLANK PAGE

Permission to reproduce items where third-party owned material protected by copyright is included has been sought and cleared where possible. Every reasonable effort has been made by the publisher (UCLES) to trace copyright holders, but if any items requiring clearance have unwittingly been included, the publisher will be pleased to make amends at the earliest possible opportunity.

Cambridge International Examinations is part of he Cambridge Assessment Group. Cambridge Assessment is the brand name of University of Cambridge Local Examinations Syndicate (UCLES), which is itself a department of he University of Cambridge.

www.root19.com +91 - 9969 353 391